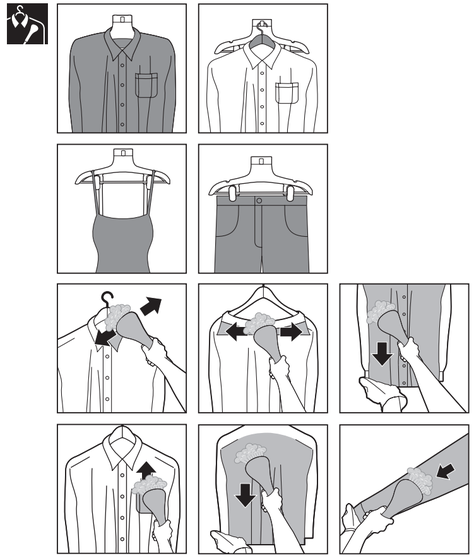

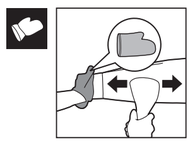

EN Put the glove on the hand you are using to hold a garment. The glove protects your hand against the steam from the steamer head.

SC 将防烫手套戴在拿着衣物的手上。防烫手套可保护您的手不被蒸汽喷头所喷出的蒸汽烫伤。

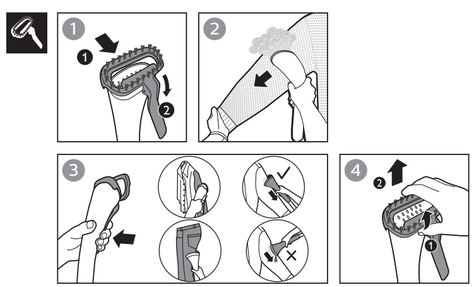

EN **Caution**: Do not attach or detach the brush/pleat maker while the steam is on or the steamer head is hot.

SC 小心：蒸汽已打开或蒸汽喷头很烫时，不要安装或拆卸毛刷/衣裤褶线夹。

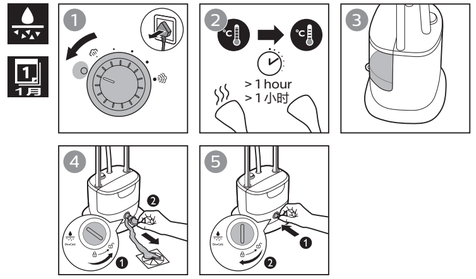

EN To maintain optimal steam performance and prolong the lifetime of the appliance, it is important to remove scales and impurities inside the appliance regularly. Therefore, it is recommended to perform the de-calc process at least once a month.

Before you start de-calc process, make sure there is some water in the water tank.

SC 为了保持良好的蒸汽熨烫性能并延长产品的使用寿命，定期去除产品内部的水垢和杂质是很有必要的。因此，建议您至少每月执行一次除垢流程。

开始执行除垢流程之前，请确保水箱中留有一些水。

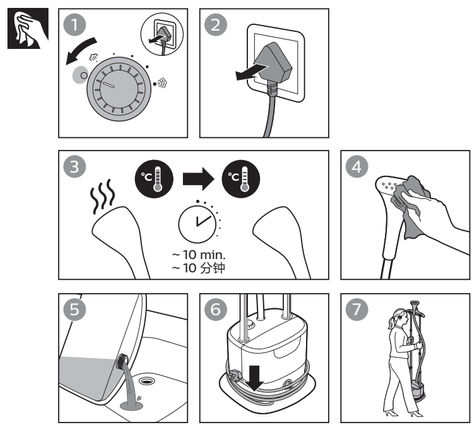

EN **Note**: Clean the appliance and wipe any deposits off the steamer head with a damp cloth and non-abrasive liquid cleaning agent.

Always empty the water tank after usage, to prevent calc build-up and maintain good steam performance.

SC 注意：用湿布和非腐蚀性液体清洁剂清洁本产品，并擦去蒸汽喷头中的沉积物。

使用后务必将水箱倒空，以防止水垢的形成并保持良好的蒸汽性能。

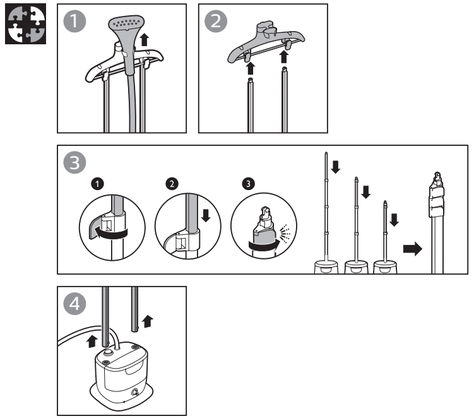

EN

Problem	Possible cause	Solution
The appliance produces no steam or irregular steam.	The steamer has not heated up sufficiently.	Let the appliance heat up for approximately 1 minute.
	Steam has condensed in the hose.	Lift the steamer head to straighten the hose vertically. This allows any condensation to flow back.
	Low water level in the tank or the tank is not inserted properly.	Refill the water tank and insert it properly.
	Too much scale has built up in the appliance.	Perform calc-clean process. Refer to section.
Water droplets drip from the steamer head or the appliance produces a croaking sound.	You have left the steamer head and/or the steam supply hose in horizontal position for a long time.	Lift the steamer head to straighten the hose vertically. This allows any condensation to flow back.
	When the hose forms a U-shape, condensation in the hose cannot flow back into the water tank.	Lift the steamer head to straighten the hose vertically. This allows any condensation to flow back.
An excessive amount of water drips out of the steamer head when the appliance is heating up.	The water in the appliance is dirty or has been left inside the appliance for a long time.	Perform calc-clean process. Refer to section.
Water leaks out from the steamer base.	You have not closed the water tank cap or de-calc knob securely.	Close the water tank cap or de-calc knob securely.
	The water tank is not inserted properly.	Insert the tank properly.

SC

问题	可能的原因	解决方法
产品无法产生蒸汽或产生的蒸汽不连贯。	蒸汽挂烫机未充分加热。	让产品加热约 1 分钟。
	有蒸汽凝结在输送管内。	提起蒸汽喷头以垂直拉直蒸汽输送管。这样做可使冷凝水流回水箱中。
	水箱中的水位低或水箱未正确插入。	为水箱加水并正确装入。
	产品内积聚的水垢太多。	执行除垢过程。请参阅 部分。
水滴从蒸汽喷头上滴下或产品发出咕噜声。	蒸汽喷头和/或蒸汽输送管水平摆放了较长时间。	提起蒸汽喷头以垂直拉直蒸汽输送管。这样做可使冷凝水流回水箱中。
	当蒸汽输送管处于 U 形状态时，输送管内的冷凝水不能流回水箱中。	提起蒸汽喷头以垂直拉直蒸汽输送管。这样做可使冷凝水流回水箱中。
产品加热时有过多的水从蒸汽喷头中滴出。	产品中的水变脏或留在产品很长时间。	执行除垢过程。请参阅 部分。
蒸汽挂烫机底座漏水。	水箱盖未盖好或除垢旋钮未拧紧。	盖好水箱盖或拧紧除垢旋钮。
	水箱未正确插入。	请正确插入水箱。

PHILIPS

GC528
GC529

User manual　　用户手册

PHILIPS

产品：	飞利浦蒸汽挂烫机
型号：	GC528, GC529
额定电压：	220 V ~
额定频率：	50 Hz
额定输入功率：	1600 W
生产日期：	请见产品本体
产地：	中国浙江慈溪

飞利浦（中国）投资有限公司
上海市静安区灵石路 718 号 A1 栋
全国顾客服务热线: 4008 800 008

本产品根据国标 GB4706.1-2005, GB4706.84-2007 制造

保留备用
发行日期：2018-02-12

©2018 Koninklijke Philips N.V.
All rights reserved.
4239 001 14181

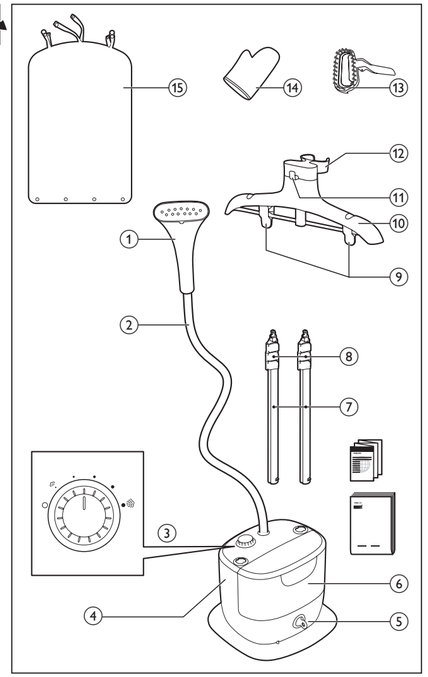

EN

① Steamer head
② Steam supply hose
③ Steam dial
④ Base
⑤ De-calc knob
⑥ Water tank
⑦ Pole
⑧ Pole lock clip
⑨ Pants clip
⑩ Hanger
⑪ Hanger hook
⑫ Steamer head holder
⑬ Pleat maker and brush
⑭ Glove
⑮ Mat

SC

① 蒸汽喷头
② 蒸汽输送管
③ 蒸汽旋钮
④ 底座
⑤ 除垢旋钮
⑥ 水箱
⑦ 衣架杆
⑧ 衣架锁夹
⑨ 裤夹
⑩ 衣架
⑪ 衣架钩
⑫ 蒸汽喷头支架
⑬ 衣裤褶线夹和毛刷
⑭ 防烫手套
⑮ 熨衣垫

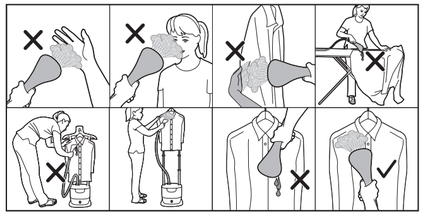

English

Introduction

Congratulations on your purchase and welcome to Philips! To fully benefit from the support that Philips offers, register your product at **www.philips.com/welcome**.

Important

Read this important information carefully before you use the appliance and save it for future reference.

Danger

- Never immerse the appliance in water or any other liquid, nor rinse it under the tap.

Warning

- Check if the voltage indicated on the appliance corresponds to the local mains voltage before you connect the appliance.
- Do not use the appliance if the plug, mains cord or the appliance itself shows visible damage, or if the appliance has been dropped or leaks.
- Do not connect the appliance to a direct current supply.
- Always return the appliance to a service centre authorised by Philips for examination or repair. Do not attempt to repair the appliance yourself, otherwise the guarantee becomes invalid.
- If the mains cord is damaged you must have it replaced by Philips, a service centre authorized by Philips or similarly qualified persons in order to avoid a hazard.
- Never leave the appliance unattended when it is connected to the mains.
- This appliance can be used by children aged from 8 years and above and persons with reduced physical, sensory or mental capabilities or lack of experience and knowledge if they have been given supervision or instruction concerning use of the appliance in a safe way and understand the hazards involved.
- When you have finished steaming, when you fill or empty the water tank, when you perform cleaning and rinsing and when you leave the appliance even for a short while, remove the mains plug from the wall socket.
- Keep the appliance and its mains cord out of reach of children.
- Children should be supervised to ensure that they do not play with the appliance. Cleaning and user maintenance shall not be made by children without supervision.
- Only connect the appliance to an earthed wall socket.
- Do not open the de-calc knob when the appliance is ON. Follow instruction manual recommendation on the cooling time before opening.
- Do not place the appliance on a surface with the steamer head touching the surface while the appliance is hot or connected to the mains.
- Do not let the mains cord come into contact with hot steam when the appliance is in operation.
- Keep the water tank closed after filling it and while using the appliance.
- The plug must be plugged to a power outlet of the same technical characteristics of the plug only.
- Do not shake the steamer head while the appliance is in operation.

Caution

- Check the mains cord regularly for possible damage.
- Beware of hot steam and hot water that comes out from steamer nozzle during use. Steam and hot water can cause burns. Care should be taken when using the appliance due to the emission of steam.
- The nozzle of steamer head can become extremely hot and may cause burns if touched.
- Unplug the appliance during filling and cleaning.
- This appliance is intended for household use only.
- Never drag or pull the appliance across the floor.
- Do not place the steamer base on top of table or chair but rather keep the steamer base on the floor during usage duration.
- If the hose forms a U shape, steam condenses in the hose. This causes irregular steam or water droplets to come out of the steamer head.
- Steam may damage or cause discolouration of certain wall or door finishes.
- Do not use the appliance when the water tank is empty.
- Do not open the de-calc knob when the appliance is ON. Follow instruction manual recommendation on the cooling time before opening.

- **⚠ CAUTION: Hot water !**

Electromagnetic fields (EMF)

This Philips appliance complies with all applicable standards and regulations regarding exposure to electromagnetic fields.

Recycling

- Do not throw away the product with the normal household waste at the end of its life, but hand it in at an official collection point for recycling. By doing this, you help to preserve the environment.

Guarantee & Service

If you need information or support, please visit www.philips.com/support or read the separate worldwide guarantee leaflet.

简体中文

简介

恭喜您购买了您的产品，欢迎您来到 Philips 大家庭！为了您能充分享受飞利浦提供的支持，请在 **www.philips.com/welcome** 上注册您的产品。

重要信息

使用产品之前，请仔细阅读本重要信息，并妥善保管以供日后参考。

危险

- 不要将本产品浸入水或其它液体中，也不要在水龙头下冲洗。

警告

- 在将产品连接电源之前，请先检查产品所标电压与当地的供电电压是否相符。
- 如果插头、电源线或产品本身已经明显损坏，或产品曾坠落或出现渗漏，请勿再使用产品。
- 切勿将产品连接到直流电源。
- 本产品应送往由飞利浦授权的服务中心检查或修理。请不要尝试自己修理产品，否则产品维修保证书将会无效。
- 如果电源线损坏，为避免危险，必须由飞利浦、飞利浦授权的服务中心或类似的专职人员来更换。
- 电源接通期间，使用者不得离开。
- 8 岁或以上年龄的儿童以及肢体不健全、感觉或精神上有障碍或缺乏相关经验和知识的人士请在他人监督或指导下使用，以确保他们安全使用，并且让他们明白相关的危害。
- 当完成熨烫、为水箱加水或清空水箱、清洁和冲洗产品以及短时间离开产品时，请从电源插座上拔下电源插头。
- 将产品和电源线放在儿童接触不到的地方。
- 应照看好儿童，确保他们不玩耍本器具。不要让儿童在无人监督的情况下进行清洁和保养。
- 产品只能使用带接地线的插座。
- 请勿在产品开启时打开除垢旋钮。打开之前，请先遵循说明手册建议的冷却时间。
- 如果产品很烫或已连接到电源，将产品放置在表面上时，切勿让蒸汽喷头接触表面。
- 产品工作期间，切勿让电源线与高温蒸汽接触。
- 水箱注水之后以及使用设备时，水箱须保持封闭。
- 必须将插头插入技术特性与插头相同的电源插座中。
- 产品工作期间，请勿摇晃蒸汽喷头。

小心

- 定期检查电线，防范潜在的危害。
- 使用过程中，请注意从蒸汽挂烫机喷嘴冒出的热蒸汽和热水。蒸汽和热水可能会导致烫伤。使用本产品时应当心蒸汽喷射。
- 蒸汽挂烫机蒸汽喷头的喷嘴会变得非常烫，触摸可能会导致烫伤。
- 注水和清洁时，请拔下设备的电源插头。
- 本产品仅限于家用。
- 切勿在地板上拖拉本产品。
- 切勿将蒸汽挂烫机底座放置在桌面或椅子上，使用过程中，请将蒸汽挂烫机底座放在地板上。
- 如果蒸汽输送管处于 U 形状态，则蒸汽会在输送管内冷凝。从而导致蒸汽输出不连贯或蒸汽喷头中滴出水滴。
- 蒸汽可能损坏或导致某些墙体或门褪色。
- 水箱为空时，请勿使用产品。
- 请勿在产品开启时打开除垢旋钮。打开之前，请先遵循说明手册建议的冷却时间。

- **⚠ 注意：热水！**

电磁场 (EMF)

本飞利浦产品符合所有有关暴露于电磁场的适用标准和法规。

回收

- 弃置产品时，请不要将它与一般生活垃圾一同丢弃，应将其交给官方指定的回收中心。这样做有利于环保。

产品中有害物质的名称及含量

部件名称	有害物质					
	铅及其化合物（Pb）	汞及其化合物（Hg）	镉及其化合物（Cd）	六价铬化合物 Cr	多溴联苯（PBB）	多溴二苯醚（PBDE）
主机 Main Body	○	○	○	○	○	○
电源线 Power cord	○	○	○	○	○	○
蒸汽喷头 Steamer Head	○	○	○	○	○	○
蒸汽输送管 Steam supply hose	○	○	○	○	○	○

本表格依据 SJ/T 11364 的规定编制。
○：表示该有害物质在该部件所有均质材料中的含量均在 GB/T 26572 规定的限量要求以下。
×：表示该有害物质至少在该部件的某一均质材料中的含量超出 GB/T 26572 规定的限量要求。

*该表格中所显示的“有害物质”在产品正常使用情况下不会对人身和环境产生任何伤害。
*该表格中所显示的“有害物质”及其存在的部件向消费者和回收处理从业者提供相关物质的存在信息，有助于产品废弃时的妥善处理。

保修与服务

如果您需要信息或支持，请访问 www.philips.com/support 或阅读单独的全球保修卡。

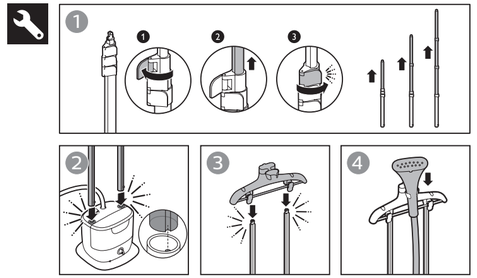

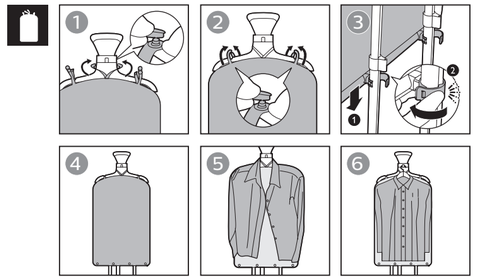

EN The mat provides backing support to enhance the steaming performance.

Note: Do not wash the mat as it may damage the foam material

SC 熨衣垫可以提供支撑以增强熨烫效果。
注意：不要清洗熨衣垫，因为这可能会损坏泡沫材料 。

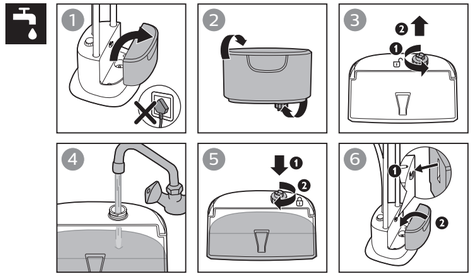

EN Your appliance has been designed to be used with tap water. In case you live in an area with hard water, fast scale build-up may occur. Therefore, it is recommended to use water without minerals such as distilled or purified water to prolong the lifetime of your appliance.

Note: Do not add perfume, vinegar, mineral water, starch, descaling agents, ironing aids, chemically descaled water or other chemicals as they may cause water spitting, brown staining, or damage to your appliance.

SC 根据设计，您的产品适用自来水。如果您所居住的区域水质较硬，水垢积聚会非常快。因此，建议使用不含矿物质的水（如蒸馏水或纯净水）以延长产品的使用寿命。

注意：请勿加入香水、醋、矿泉水、淀粉、除垢剂、烫衣剂、化学除垢水或其他化学品，这些物质会造成喷水、留下棕色污渍或损坏产品。

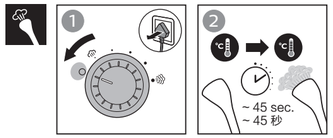

EN Multi steam settings are provided to save water and energy. You can increase the steam setting for more steam power at any point of time. The appliance is safe to use on all fabrics at any setting.

Note: The steam supply hose becomes warm during steaming. This is normal.

SC 本产品提供了多档蒸汽设置，便于节水和降低能耗。您可以调高蒸汽设置档位，以便随时获得更强劲的蒸汽动力。本产品在任何档位下都可以安全用于所有可熨面料。

注意：蒸汽熨烫期间，蒸汽输送管会变热。这是正常的。